Section

8

THE ROBOT

TABLE OF CONTENTS

8 THE ROBOT **2**

8.1 OVERVIEW **2**

8.1.1 Getting Started *2*

8.1.2 Related Documents & Resources *2*

8.1.3 Conventions *3*

8.2 DEFINITIONS **3**

8.3 ROBOT RULES **7**

8.3.1 Safety & Damage Prevention *8*

8.3.2 General Robot Design *11*

8.3.3 Budget Constraints *14*

8.3.4 Fabrication Schedule *16*

8.3.5 Material Utilization *18*

8.3.6 Power Distribution *19*

8.3.7 Motors & Actuators *23*

8.3.8 Control, Command & Signals System *24*

8.3.9 Pneumatic System *27*

8.3.10 Operator Console *30*

8.3.11 Robot Inspection *31*

8 THE ROBOT

8.1 OVERVIEW

This section of the 2010 *FIRST* Robotics Competition (FRC) manual provides rules applicable to the design and construction of the 2010 ROBOT. ROBOTS will be inspected at each FRC event to verify rules compliance before being allowed to compete.

COMPLIANCE WITH ALL RULES IS MANDATORY

8.1.1 Getting Started

Please be sure to thoroughly read and understand ***Sections 4, 6, 7, 8, and 9*** of this manual before designing your ROBOT. In particular, pay attention to ***Section 8.3.1 - General Design & Safety Rules*** and ***Section 8.3 - Robot Rules*** before proceeding. The following are just a few important points offered to help teams in getting started:

1. Evaluate the game's physical challenges and identify those that the robot will have to overcome.

- Will it have to climb, pick and place items, push / pull objects or robots, possess a low profile,
- extend its height, lift items, hang, etc.?
- What are the game's implications regarding the ROBOT'S center of gravity?
- Are unique FIELD surface characteristics important when determining robot driving mechanism design?
- Are there any particular offensive / defensive capabilities important to the ROBOT?

2. Inspect all items provided in the 2010 Kit Of Parts (KOP) (see ***Section 10*** and the ***Kit Of Parts Checklist***) and review their basic features.

3. We recommend that you carefully read the documents listed in ***Section 8.1.2, Related Documents & Resources.***

4. Look over the specifications and technical notes provided for the various KOP components.

5. Note all safety rules relating to the ROBOT'S design. They include:

- The locations and ratings of circuit breakers where indicated in the wiring diagrams
- Wire size
- Stored energy guidelines
- Attention to sharp corners and edges
- Shields for moving parts and pinch points

8.1.2 Related Documents & Resources

In addition to this chapter, other sections in this manual and other documents should be reviewed before proceeding with the robot design process. Note that all referenced documents are available on-line at http://www.usfirst.org/community/frc/content.aspx?id=452.

- ***Section 6: The Arena***, ***Section 7: The Game*** and ***Section 9: The Tournament***

- Crate constraints and deadlines as listed in ***Section 4: Robot Transportation***
- ***Section 10: Kit Of Parts***
- *User Guide: AndyMark Inc Drive System* – Information to assemble chassis kit is included in the KOP and is also available at: http://www.andymark.biz/
- *FIRST* 2010 Pneumatics Manual - Valuable information about the pneumatic components and ordering processes are included.
- *FIRST* 2010 Sensors Manual – Helpful information regarding the application, assembly, and programming of the sensors included in the 2010 Kit Of Parts.
- 2010 Robot Power Distribution Diagram
- 2010 Robot Data Diagram
- *FIRST* Official Robot Inspection Sheet - it is strongly recommended that this be used as a guide to pre-inspect your ROBOT before it ships (this document will be posted in January, 2010)
- *2010 FIRST* Robotics Competition Suggestions

8.1.3 Conventions

Specific methods are used throughout this section to highlight warnings, cautions, key words or phrases. The intent is to alert the reader to important information designed to help teams in constructing a robot that complies with the rules in a safe and workmanlike manner.

Key words that have a particular meaning within the context of the 2010 FRC are defined in ***Section 6***, ***Section 7.2*** and ***Section 8.2***, and indicated in ALL CAPITAL letters throughout this text. References to other sections of the manual appear in ***bold italics***. References to specific rules within the manual are indicated with a bracketed reference to the rule (e.g. “Rule <S01>”). Operating keys, controls, buttons appear in bold capital letters (e.g. **OFF/ON** switch).

> Warnings, cautions, and notes appear in blue boxes. These notes are intended to provide insight into the reasoning behind a rule, helpful information on understanding and interpreting a rule, and/or possible “best practices” for use when implementing systems affected by the rule. These notes are not part of the formal rules, and do not carry the weight of a rule (if there is an inadvertent conflict between a rule and a note, the rule applies). However, it is strongly recommended that you pay close attention to their contents.

8.2 DEFINITIONS

BUMPERS – Bumper assemblies designed to attach to the exterior of the ROBOT within the BUMPER ZONE, and constructed as specified in Rule <R07>. BUMPERS are excluded from the weight and volume calculations specified in Rule <R10>.

BUMPER PERIMETER – the polygon defined by the outer-most set of exterior vertices of the BUMPERS when they are attached to the ROBOT. To identify the BUMPER PERIMETER, wrap a string around the BUMPERS at the level of the BUMPER ZONE - the string describes the polygon.

BUMPER ZONE – the volume contained between two virtual horizontal planes, ten inches above the floor and sixteen inches above the floor.

COMPONENT – A ROBOT part in its most basic configuration, which can not be disassembled without damaging or destroying the part, or altering its fundamental function.

- Example 1: raw aluminum stock, pieces of steel, wood, etc., cut to the final dimensions in which they will be used on the ROBOT, would all be considered components. Bolting pieces of extruded aluminum together as a ROBOT frame would constitute a MECHANISM, and the collection of pieces would not be considered a COMPONENT.
- Example 2: a COTS (see immediately below) circuit board is used to interface to a sensor on the ROBOT, and it includes the circuit board and several electrical elements soldered to the board. The board is considered a COMPONENT, as this is the basic form in which it was purchased from the vendor, and removing any of the electrical elements would destroy the functionality of the board.

COTS – A "Commercial, Off-The-Shelf" COMPONENT or MECHANISM, in its unaltered, unmodified state. A COTS item must be a standard (i.e. not custom order) part commonly available from the VENDOR, available from a non-team source, and available to all teams for purchase.

- Example 1: a team orders two robot grippers from RoboHands Corp. and receives both items. They put one in their storeroom and plan to use it later. Into the other, they drill "lightening holes" to reduce weight. The first gripper is still classified as a COTS item, but the second gripper is now a "custom part" as it has been modified.
- Example 2: a team obtains openly available blueprints of a drive component commonly available from Wheels-R-Us Inc. and has local machine shop "We-Make-It, Inc." manufacture a copy of the part for them. The produced part is <u>NOT</u> a COTS item, because it is not commonly carried as part of the standard stock of We-Make-It, Inc.
- Example 3: a team obtains openly available design drawings from a professional publication during the pre-season, and uses them to fabricate a gearbox for their ROBOT during the build period following kick-off. The design drawings would be considered a COTS item, and may be used as "raw material" to fabricate the gearbox. The finished gearbox itself would be a FABRICATED ITEM, and not a COTS item.

DRIVER STATION - The collection of the Classmate PC, FirstTouch I/O Module and breadboard provided in the KOP, and a USB hub (either the one provided in the KOP, or a team-supplied USB hub device).

FABRICATED ITEM – Any COMPONENT or MECHANISM that has been altered, built, cast, constructed, concocted, created, cut, heat treated, machined, manufactured, modified, painted, produced, surface coated, or conjured partially or completely into the final form in which it will be used on the ROBOT.

- Example 1: A piece of extruded aluminum has been ordered by the team, and arrives in a 20-foot length. To make it fit in their storage room, the team cuts it into two ten-foot lengths. These would not be considered FABRICATED ITEMS, as they have not been cut to the final length in which they will be used on the ROBOT.
- Example 2: A team designs an arm mechanism that uses gears with a half-inch face width. They order a 12-inch length of gear stock and cut it into precise half-inch slices. They do not bore out the mounting bores in the center of the gears. The slices are now considered FABRICATED ITEMS, as the final fabrication process has started, even though all the machining operations (the center bore) may not yet be completed.

FINALE CONFIGURATION - The physical configuration and orientation of the ROBOT while playing during the FINALE phase of the game (i.e. the last 20 seconds of the MATCH). This configuration is dynamic, and may change multiple times during the FINALE phase of a MATCH.

FRAME PERIMETER – the polygon defined by the outer-most set of exterior vertices on the ROBOT (without the BUMPERS attached) that are within the BUMPER ZONE. To determine the FRAME

PERIMETER, wrap a piece of string around the ROBOT at the level of the BUMPER ZONE - the string describes this polygon.

KIT OF PARTS (KOP) – The collection of items listed in the ***2010 Kit Of Parts Checklist*** (provided on line at http://www.usfirst.org/community/frc/content.aspx?id=452). For rookie teams, all of these items will be provided to them by *FIRST* at the FRC Kick-off. For veteran teams, some of these items will be provided by *FIRST* and some must be either retrieved from previous ROBOTS or purchased separately. For the purposes of these rules, the 2010 versions of all of the items listed in the ***2010 Kit Of Parts Checklist*** will be considered "in the 2010 Kit" regardless of the method of acquisition.

MECHANISM – A COTS or custom assembly of COMPONENTS that provide specific functionality on the ROBOT. A MECHANISM can be disassembled (and then reassembled) into individual COMPONENTS without damage to the parts.

NORMAL CONFIGURATION – The physical configuration and orientation of the ROBOT when the MATCH is started. This is the state of the ROBOT immediately before being enabled by the Field Management System, before the ROBOT takes any actions, deploys any mechanisms, or moves away from the starting location. This configuration is static, and does not change during a single MATCH (although it may change from MATCH to MATCH).

OPERATOR CONSOLE – the DRIVER STATION devices, and any associated equipment, control interfaces, display systems, structure, decorations, etc. used by the DRIVERS to operate the ROBOT.

REPLACEMENT PARTS – A COMPONENT or MECHANISM constructed as a functional duplicate of an existing part of the ROBOT, for the purpose of replacing a broken or defective part. REPLACEMENT PARTS may be either COTS items or FABRICATED ITEMS. They must be functionally identical to the original part but can be modified to provide more robust performance of the function.

- Example 1: A lever arm made of polycarbonate on your ROBOT breaks. You manufacture a REPLACEMENT PART made of aluminum plate, using the design drawings of the original. As the new part provides the same function as the broken part, the new part is a valid REPLACEMENT PART.
- Example 2: A sensor on the ROBOT is connected to the control system with 24 AWG single-strand wire, and runs across a hinged joint. The flexing of the wire causes it to break, and you want to replace it with 18 AWG multi-strand wire. If the new wire follows the same path as the original and connects only the same devices, then it is a valid REPLACEMENT PART (i.e. it has added robustness without changing function). But if the wire is then used to connect an additional sensor to the same circuit, it is providing a functionally different capability, and is no longer a "replacement."

ROBOT - A FRC ROBOT is a remotely operated vehicle designed and built by a FRC team to perform specific tasks when competing in the 2010 competition "*Breakaway*." The ROBOT must include all the basic systems required to be an active participant in the game – power, communications, control, mobility, and actuation. The ROBOT implementation must obviously follow a design approach intended to play the 2010 FRC game (e.g. a box of unassembled parts placed on the FIELD, or a ROBOT designed to play a different game, would not satisfy this definition).

SPARE PARTS – A COMPONENT or MECHANISM constructed as an identical duplicate of an existing part of the ROBOT, for the purpose of replacing a broken or defective part. SPARE PARTS may be either COTS items or FABRICATED ITEMS, but they must be physically and functionally identical to the original part.

UPGRADE PARTS - A COMPONENT or MECHANISM intended to provide additional functionality not currently available on the ROBOT. UPGRADE PARTS may be COTS items or custom FABRICATED ITEMS, and may either add to or replace existing functionality.

- Example 1: A ROBOT is designed with a four-wheel drive system. The system works well on flat floors, but high-centers when trying to drive up the BUMPS. The team adds two more wheels on the centerline of the ROBOT to prevent this problem, and the wheels are identical to those already on the ROBOT. The new wheels would be considered UPGRADE PARTS even though they are the same as the ones already in place, as they alter the functionality of the ROBOT and provide new capability.

VENDOR – A legitimate business source for COTS items that satisfies all of the following criteria:

A. The VENDOR must have a Federal Tax Identification number. The Federal Tax Identification number establishes the VENDOR as a legal business entity with the IRS, and validates their status as a legitimate business. In cases where the VENDOR is outside of the United States, they must possess an equivalent form of registration or license with the government of their home nation that establishes and validates their status as a legitimate business licensed to operate within that country.

B. The VENDOR shall not be a "wholly owned subsidiary" of a team or collection of teams. While there may be some individuals affiliated with both a team and the VENDOR, the business and activities of the team and VENDOR must be completely separable.

C. The VENDOR must be normally able to ship any general (i.e., non-*FIRST* unique) product within five business days of receiving a valid purchase request. It is recognized that certain unusual circumstances (such as 1,000 *FIRST* teams all ordering the same part at once from the same VENDOR) may cause atypical delays in shipping due to backorders for even the largest VENDORS. Such delays due to higher-than-normal order rates are excused.

D. The business should maintain sufficient stock or production capability to fill teams orders within a reasonable period during the build season (less than 1 week). Note that this criterion may not apply to custom-built items from a source that is both a VENDOR and a fabricator. For example, a VENDOR may sell flexible belting that the team wishes to procure to use as treads on their drive system. The VENDOR cuts the belting to a custom length from standard shelf stock that is typically available, welds it into a loop to make a tread, and ships it to a team. The fabrication of the tread takes the VENDOR two weeks. This would be considered a FABRICATED ITEM, and the two weeks ship time is acceptable. Alternately, the team may decide to fabricate the treads themselves. To satisfy this criterion, the VENDOR would just have to ship a length of belting from shelf stock (i.e. a COTS item) to the team within five business days and leave the welding of the cuts to the team.

E. The VENDOR makes their products available to all FRC teams. VENDORS must not limit supply or make a product available to just a limited number of FRC teams.

> The intent of this definition it to be as inclusive as possible to permit access to all legitimate sources, while preventing *ad hoc* organizations from providing special-purpose products to a limited subset of teams in an attempt to circumvent the cost accounting rules. *FIRST* desires to permit teams to have the broadest choice of legitimate sources possible, and to obtain COTS items from the sources that provide them with the best prices and level of service available. Teams also need to protect against long delays in availability of parts that will impact their ability to complete their ROBOT. The FRC build season is brief, so the VENDOR must be able to get their product, particularly *FIRST* unique items, to a team in a timely manner. Ideally, chosen VENDORS should have national distributors (e.g. Home Depot, Lowes, MSC, Radio Shack, McMaster-Carr, etc.) Remember, FRC events are not usually near home – when parts fail, local access to replacement materials is often critical.

WITHHOLDING ALLOWANCE – A limited amount of FABRICATED ITEMS that are withheld from the ROBOT shipping requirements (specified in ***Section 4***) and retained by the team following the shipping deadlines. These items are then hand-carried to a competition event by the team. The OPERATOR CONSOLE is automatically included in the WITHHOLDING ALLOWANCE. Beyond that, the incoming material maximums specified in Rule <R38> limits the amount of FABRICATED ITEMS included in the WITHHOLDING ALLOWANCE.

8.3 ROBOT RULES

These rules establish the global ROBOT construction and performance constraints dictated by the characteristics of the provided KOP, along with the size and weight design limits. **Compliance with the rules is mandatory, and is the responsibility of every team! Any ROBOT construction not in compliance with the rules (as determined at inspection) must be rectified before a ROBOT will be allowed to compete.**

When constructing the ROBOT, the team is allowed to use the items in the ***2010 KOP Checklist*** and additional materials. Many of the rules listed below explicitly address what and how parts and materials may be used. There are many reasons for the structure of the rules, including safety, reliability, parity, creation of a reasonable design challenge, adherence to professional standards, impact on the competition, compatibility with the KOP, etc. When reading these rules, please use technical common sense (engineering thinking) rather than “lawyering” the interpretation and splitting hairs over the precise wording in an attempt to find loopholes. Try to understand the reasoning behind a rule.

One of the purposes of the *FIRST* Robotics Competition is to provide team members with the experience of conceiving, designing, and constructing their solution to the annual competition challenge. We want each student to have the experience of creating a new system each year. As the team considers the creation of their machine, this aspect of the program should be kept in mind. Solutions that merely bolt together a minimum number of externally-designed COTS subsystems may not offer the students the opportunity to understand the “why” or “how” of an item’s design. Likewise, solutions that are merely minor modifications of a design utilized for a previous competition does not offer the current students complete insight into the full design process. Purchasing optimization and design re-use are both important concepts, however teams must be cautious not to over-utilize them to the point that the student’s experience is compromised.

This intent is clearly met when a team obtains a MECHANISM or COTS items that was designed for non-*FIRST* purposes, and then modifies or alters it to provide functionality for the ROBOT. For example, if a team obtains a gearbox from a power drill and modifies it to use on the ROBOT, they gain insight into the design of the original gearbox purpose, learn to characterize the performance of the original design, and implement the engineering design process to create their customized application for the gearbox.

However, COTS items that have been specifically designed as a solution to part of the FRC challenge may or may not fit within the FRC intent, and must be carefully considered. If the item provides general functionality that can be utilized in any of several possible configurations or applications, then it is acceptable (as the teams will still have to design their particular application of the item). However, COTS items that provide a complete solution for a major ROBOT function (e.g. a complete manipulator assembly, pre-built pneumatics circuit, or full mobility system) that require no effort other than just bolting it on to the ROBOT are against the intent of the competition, and will not be permitted.

In addition, another intent of these rules is to have all energy sources and active actuation systems on the ROBOT (e.g. batteries, compressors, motors, servos, cylinders, and their controllers) drawn from a well-defined set of options. This is to ensure that all teams have access to the same actuation resources, and to ensure that the inspectors are able to accurately assess the legality of a given part.

8.3.1 Safety & Damage Prevention

<R01> Energy used by FRC ROBOTS, (i.e., stored at the start of a MATCH), shall come only from the following sources:

A. Electrical energy derived from the onboard 12V battery (see Rule <R40> for specifications and further details).

B. Compressed air stored in the pneumatic system, stored at a maximum pressure of 120 PSI in no more than four Clippard Instruments tanks. Extraneous lengths of pneumatic tubing shall not be used to increase the storage capacity of the air storage system.

C. A change in the altitude of the ROBOT center of gravity.

D. Storage achieved by deformation of ROBOT parts.

> Teams must be very careful when incorporating springs or other items to store energy on their ROBOT by means of part or material deformation. A ROBOT may be rejected at inspection if, in the judgment of the inspector, such items are unsafe

<R02> ROBOT parts shall not be made from hazardous materials, be unsafe, or cause an unsafe condition. Items specifically PROHIBITED from use on the ROBOT include (but are not limited to):

A. Shields, curtains, or any other devices or materials designed or used to obstruct or limit the vision of any DRIVERS and/or COACHES and/or interfere with their ability to safely control their ROBOT

B. Speakers, sirens, air horns, or other audio devices that generate sound at a level sufficient to be a distraction or hindrance affecting the outcome of a MATCH

C. Any devices or decorations specifically intended to jam or interfere with the remote sensing capabilities of another robot,including vision systems, acoustic range finders, sonars, infra-red proximity detectors, etc.(e.g. including imagery on your robot that, to a reasonably astute observer, mimics the VISION TARGET)

D. Exposed lasers of any type (COTS devices with completely enclosed integral lasers, such as a laser ring gyro, are permitted)

E. Flammable gasses

F. Any devices intended to produce flames or pyrotechnics

G. Materials that off-gas noxious or toxic gasses

H. Materials that produce hazardous inhalable particles

I. Caustic chemicals

J. Hydraulic fluids or hydraulic components

Teams should provide MSD Sheets for any materials they use that might be considered questionable during ROBOT inspection.

<R03> Custom circuits and COTS electronics are expressly PROHIBITED if they:

A. Interfere with the operation of other ROBOTS.

B. Directly affect any output devices on the ROBOT, such as by directly powering a motor, supplying a PWM signal directly to a speed controller or supplying a control signal directly

to a relay module (see Rules <R63> and <R64> for the specific exception regarding CAN-bus devices).

<R04> Protrusions from the ROBOT shall not pose hazards to GAME PIECES or people. If the ROBOT includes protrusions that form the "leading edge" of the ROBOT as it drives, and are less than one square inch in surface area, it will invite detailed inspection. For example, forklifts, lifting arms, grapplers. etc. may be carefully inspected for these hazards.

> Note: inspectors will be looking for sharp corners and edges that could cause injury, pinch points, entanglement hazards, and impaling projections. Please mitigate all such hazards. This is for the protection of team members and field personnel as well as game equipment.

<R05> Exterior or exposed surfaces on the ROBOT shall not present undue hazards to the team members, event staff or GAME PIECES. Reasonable efforts must be taken to remove, mitigate, or shield any sharp edges, pinch points, entanglement hazards, projectiles, extreme visual/audio emitters, etc. from the exterior of the ROBOT. All points and corners that would be commonly expected to contact a Game Piece should have a minimum radius of 0.125 inches to avoid becoming a snag/puncture hazard. All edges that would be commonly expected to contact a Game Piece should have a minimum radius of 0.030 inches. All of these potential hazards will be carefully inspected.

<R06> MECHANISMS or COMPONENTS on the ROBOT shall not pose obvious risk of entanglement. If the structure of a COMPONENT permits easy penetration by an object less than four square inches in cross section, it will invite detailed inspection. Willful entanglement <u>actions</u> are addressed in Rule <G40>.

> Note: Nets, loose rope or wire, voluminous sheets of fabric, etc. may be carefully inspected for these hazards. A ⅛" x ⅛" tight-mesh net (or very loose mesh fabric, depending on your point of view) may be a reasonable material that would not automatically pose an entanglement hazard. However, any flexible material has the potential to become an entanglement hazard if it is not firmly attached to an appropriate structure or left in a loose, voluminous configuration. Therefore, you must use your best judgment to determine if your particular use of the material will pose an entanglement hazard. However, actual performance on the playing field will determine if the potential for entanglement is significant or not.

<R07> Teams are required to use BUMPERS on their ROBOTS. BUMPERS have several advantages, such as reducing damage to ROBOTS when they contact other ROBOTS or ARENA elements, and being excluded from the calculation of ROBOT weight and volume constraints specified in Rule <R10>. The BUMPER location and design have been specified so that ROBOTS will make BUMPER-to-BUMPER contact during most collisions. If implemented as intended, a ROBOT that is pushed against a vertical wall in any normal NORMAL CONFIGURATION will always have the BUMPER be the first thing to contact the wall. To achieve this, BUMPERS must be constructed as described below and illustrated in Figure 8 – 1.

A. BUMPERS must provide complete protection of the entire FRAME PERIMETER of the ROBOT (i.e. BUMPERS must wrap entirely around the ROBOT). The BUMPERS must be located entirely within the BUMPER ZONE when the ROBOT is standing normally on a flat floor, and must remain there (i.e. the BUMPERS must not be articulated or designed to move outside of the BUMPER ZONE).

B. BUMPERS must be built in segments, with a minimum length of six inches, and a maximum length that does not exceed the maximum horizontal dimension of the ROBOT (except for the soft cushion in the corner, as permitted by Rule <R07-L>).

C. BUMPERS must use a stacked pair of 2½ inch "pool noodles" as the bumper cushion material.

D. Each BUMPER segment must be backed by a piece of ¾-inch thick by 5-inch tall piece of plywood. Each piece of BUMPER backing must be a minimum of 6 inches long. Small clearance pockets and/or access holes in the BUMPER backing are permitted, as long as they do not significantly affect the structural integrity of the BUMPER.

E. The BUMPERS must be covered with a rugged, smooth cloth (1000 dernier Cordura Plus® strongly recommended). The cloth must completely enclose the BUMPER backing (plywood) and cushion (pool noodle) material. It is recommended that lengths of aluminum angle be used to clamp the fabric in place.

F. The fabric covering the BUMPERS must be solid red or solid blue in color. Visually, the red or blue must be as close to the corresponding color in the *FIRST* logo as reasonable (i.e. to a reasonably astute observer, they appear similar). The only markings permitted on the BUMPER fabric cover are the team number (see Rule <R15>).

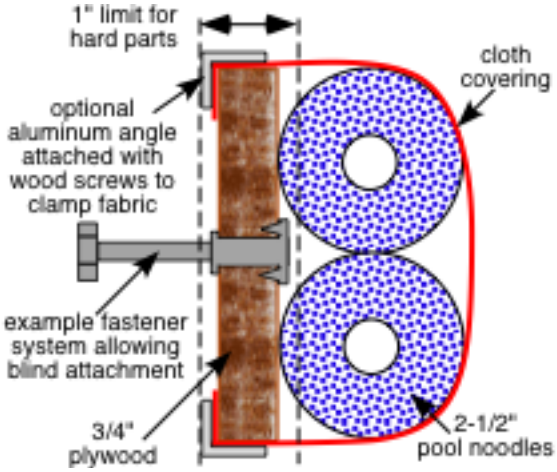

Cross-section View

Figure 8 – 1

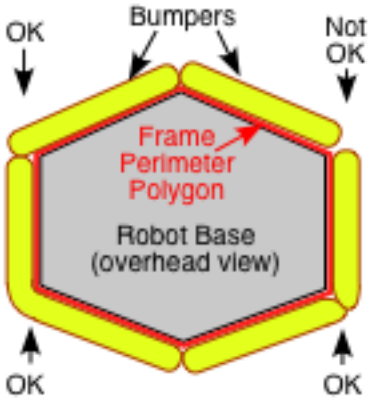

Overhead View

Figure 8 – 2

G. Each set of BUMPERS (including any fasteners and/or structures that attach them to the ROBOT) must weigh no more than 20 pounds.

H. BUMPERS must be designed for quick and easy installation and removal, to aid in weighing and inspection (as a guideline, BUMPERS should be removable by one person in less than ten minutes).

I. BUMPERS must attach to the FRAME PERIMETER of the ROBOT with a rigid fastening system to form a tight, robust connection to the main structure/frame (e.g. not attached with Velcro). The attachment system must be designed to withstand vigorous game play – nut and bolt fasteners are recommended. All removable fasteners (e.g. bolts, locking pins, pip-pins, etc.) will be considered part of the BUMPERS.

J. If a multi-part attachment system is utilized (e.g. interlocking brackets on the ROBOT and the BUMPER), then the elements permanently attached to the ROBOT will be considered part of the ROBOT, and the elements attached to the BUMPERS will be considered part of the BUMPER. Each element must satisfy all applicable rules for the relevant system.

K. As part of the 100% coverage, BUMPERS must protect all exterior corners of the FRAME PERIMETER. For adequate protection, a full segment of BUMPER must be placed on each side of the corner (see Figure 8 - 2).

L. Joints between BUMPER segments and the radial projections of corners must be filled with "soft" BUMPER materials. This may be done with short pieces of vertically oriented pool noodle, by wrapping the pool noodles around the corners, or by beveling the ends between adjacent segments so they form a tight and complete protective surface (see Figure 8 – 2).

M. The entire length of the BUMPER backing must be supported by the structure/frame of the ROBOT (i.e. the backing material must not be in "free space" between or beyond attachment points) (see Figure 8 – 3).

N. "Hard" parts of the BUMPER (i.e. plywood backing, fastening system, and clamping angles) may extend up to a maximum of one inch beyond the FRAME PERIMETER. "Soft" parts of the BUMPERS (i.e. pool noodles and cloth covering) may extend up to 3½ inches beyond the FRAME PERIMETER.

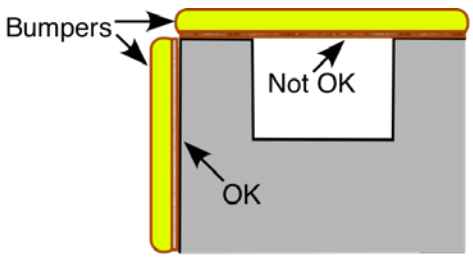

Figure 8 - 3

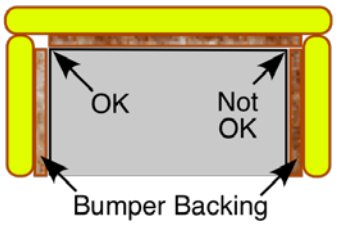

Figure 8 - 4

O. The BUMPER backing must not extend beyond the "edge" of the ROBOT. The backing of adjacent BUMPER segments must not attach to each other if the attachment would require that the joint extend into the corner (see Figure 8 – 4).

Note: As bumper mounts are being designed, methods for carrying the ROBOT will have to be considered (BUMPERS typically do not make good handles!). Also, note that the use of BUMPERS may preclude the use of other technologies in their out-of-the-box configurations. Teams will need to carefully consider the interactions between BUMPER design options and other elements of their ROBOT design.

<R08> ROBOT wheels, tracks, and other parts intended to provide traction on the FIELD may be purchased or fabricated ("traction devices" include all parts of the ROBOT that are designed to transmit any propulsive and/or braking forces between the ROBOT and the FIELD). In no case will traction devices that damage the carpet or other playing surfaces be permitted. Traction devices shall not have surface features such as metal, sandpaper, hard plastic studs, cleats, or other attachments. Anchors (i.e. devices that are deployed/used to keep one's ROBOT in one place and prevent if from being moved by another ROBOT) shall not use metal in contact with the carpet to "stay put." Gaining traction by using adhesives or Velcro-like fastener material is not allowed.

8.3.2 General Robot Design

<R09> Each registered FRC team can enter ONE (1) ROBOT into the 2010 FRC. That ROBOT shall fully comply with all rules specified in the 2010 FRC manual.

<R10> During the MATCH, the ROBOT will assume one of two operating configurations. When in each configuration, the ROBOT shall fit within the limits shown below (note: these limits are defined in reference to the ROBOT, not the FIELD).

	Maximum Horizontal Dimensions	Maximum Height	Maximum Weight
NORMAL CONFIGURATION	Rectangular space no more than 28 inches (71.12cm) by 38 inches (96.52cm)	60 inches (152.40cm)	120 pounds (54.43Kg)
FINALE CONFIGURATION	84 inch (213.4cm) diameter vertical right cylindrical volume	90 inches (243.8cm)	120 pounds (54.43Kg)

A. Exception: solely for the purposes of determining compliance with the weight and volume limitations, these items are NOT considered part of the ROBOT and are NOT included in the weight and volume assessment:
   - The 12V battery and its associated half of the Anderson cable quick connect/disconnect pair (including no more than 12 inches of cable per leg, the associated cable lugs, connecting bolts, and insulating electrical tape),
   - BUMPER assemblies (including BUMPER covers, if appropriate) that are in compliance with Rule <R07> and Rule <R12>,
   - The OPERATOR CONSOLE.

<R11> The FRAME PERIMETER must be comprised of fixed, non-articulated structural elements of the ROBOT. The FRAME PERIMETER must remain a fixed, unchanging polygon throughout the MATCH.

<R12> The color of the BUMPERS will be used to identify the ALLIANCE to which the ROBOT has been assigned, red or blue. Therefore, each ROBOT must be able to display red BUMPERS and blue BUMPERS This may be done via either of two acceptable methods:

A. Each ROBOT may be built with two complete sets of interchangeable BUMPERS, one red and one blue. If this method is chosen, the BUMPERS must be identical except for the color of the covering fabric (see Rule <R07-F>).

B. The BUMPERS may be constructed with a fabric covering of one color (see Rule <R07-F>), and then covered with a removable fabric shroud of the opposite color when appropriate. The removable cover must completely enclose the BUMPERS and conceal the contrasting fabric. The cover must be constructed solely of fabric and a fastening/restraining system to hold the cover in place. The fastening/restraining system must extend no further than one inch beyond the FRAME PERIMETER (i.e. no further than any other hard parts of the BUMPER - see Rule <R07-N>). Please note that the fastening/restraining system MUST be designed with robust performance in mind. The restraints must hold the removable cover in place during vigorous interactions with other ROBOTS and FIELD elements during the MATCH without allowing the cover to come off.

<R13> When determining weight, the basic ROBOT structure and all elements of all additional mechanisms that might be used in different configurations of the ROBOT shall be weighed together**.** Included in the weight limit are the robot control system, decorations, and all other attached parts.

- <u>Example</u>: A team has decided to design their ROBOT such that, before any given MATCH, they may change the configuration of the ROBOT based on perceived strengths or weaknesses of an opponent. The team accomplished this by constructing

a basic drive train platform plus two versions of a GAME PIECE manipulator, each manipulator being a quick attach / detach device such that either one or the other (but not both) may be part of the ROBOT at the beginning of a MATCH. Their ROBOT platform weighs 107 lb, version A of the manipulator weighs 6 lb, and version B weighs 8 lb. Although only one version will be on the ROBOT during a MATCH, both manipulators (and all components of the manipulators that would be used during the MATCH) must be on the scale along with the ROBOT platform during weigh in. This would result in a **rejection** of the ROBOT because its total weight comes to 121 lb.

<R14> ROBOTS shall display their school name (or the name of the supporting youth organization, if appropriate), and primary sponsor name and/or logo whenever the ROBOT is on the FIELD, including practice sessions.

> The support provided by the corporate sponsors and mentors on your team is important, and is to be acknowledged with the appropriate display of their names/logos on the exterior of the ROBOT.

<R15> Teams shall display their team number on the BUMPERS in <u>four</u> locations at approximately 90-degree intervals around the perimeter of the ROBOT. **The numerals must be at least 4 inches high, at least in ¾-inch stroke width and in a contrasting color from its background**. Team Numbers must be clearly visible from a distance of not less than 100 feet, so that judges, referees, and announcers can easily identify competing ROBOTS.

<R16> During normal operation no part of the ROBOT shall extend outside the vertical projection of the FRAME PERIMETER, except as permitted by Rule <G30>.

> Note: This means no "mushroom-bots." If a ROBOT is designed as intended, in normal operation you should be able to push the ROBOT (with BUMPERS removed) up against a vertical wall, and the FRAME PERIMETER will be the only point of contact with the wall.

<R17> Any non-functional decorations included on the ROBOT must not affect the outcome of the MATCH, and must be in the spirit of "Gracious Professionalism."

<R18> When positioned on the ROBOT, the primary battery must be secured so that it will not dislodge should the ROBOT be turned over or placed in any arbitrary orientation.

> Breakaway is a very vigorous game, with rapid changes in orientation as the ROBOTS cross the BUMPS and a potential for significant interaction among ROBOTS. There is a high probability that your ROBOT will be overturned at some point. Should that happen, your design must prevent the battery from falling out and damaging itself, your ROBOT, or other ROBOTS.

<R19> ROBOTS must be designed so that in normal operation BALLS cannot extend more than 3 inches inside the FRAME PERIMETER below the level of the BUMPER ZONE.

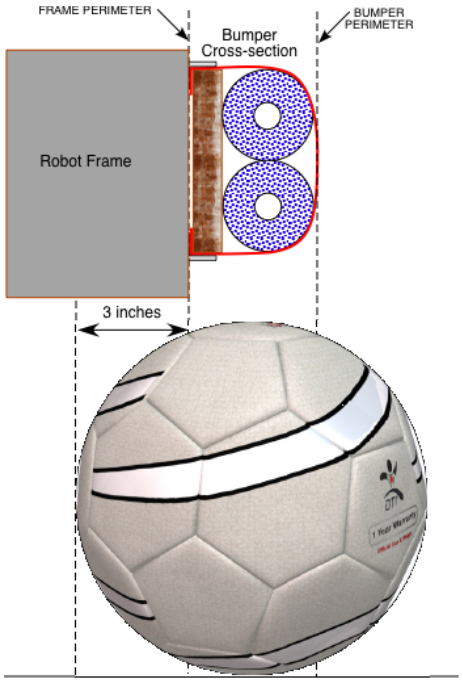

Figure 8-5

<R20> Field power to the ROBOTS will **not** be re-enabled after a MATCH. ROBOTS must be designed to permit removal of GAME PIECES from the ROBOT, and removal of the ROBOT from TOWERS and/or other ROBOTS without requiring activation of the ROBOT power system.

8.3.3 Budget Constraints

<R21> All items and materials used in the construction of a ROBOT, and their associated costs, shall be recorded (in US dollars) in a consolidated Bill Of Materials (BOM). The BOM must use the *FIRST*-approved template available for download at http://www.usfirst.org/community/frc/content.aspx?id=452. Please refer to Rule <R89> in **Section 8.3.11 - Robot Inspection** for information regarding submission of the BOM.

- All KOP items used on the ROBOT must be included in the BOM. The source for each of the KOP items should be listed as "KOP" and the indicated cost should be listed as "$0.00."

<R22> The total cost of all non-KOP items shall not exceed $3,500.00 USD.

A. All costs are to be determined as explained in ***Section 8.3.3.1*** – Cost Determination of Additional Parts

B. No individual item shall have a value of over $400.00. The total cost of COMPONENTS purchased in bulk may exceed $400.00 USD as long as the cost of an individual COMPONENT does not exceed $400.00.

<R23> The following items are EXCLUDED from the total cost calculation:

A. All items provided in the 2010 KOP

B. The cost of any non-functional decorations

C. The cost of individual fasteners, adhesives, or lubricants, unless any one component exceeds $1.00

D. The costs of SPARE PARTS. A SPARE PART used as a direct replacement for a failed or defective ROBOT part (either KOP item or non-KOP item) that has already been included in the cost accounting is covered by the accounting for the original part

E. All costs for the construction of the OPERATOR CONSOLE

<R24> Individual COMPONENTS or MECHANISMS retrieved from previous ROBOTS and used on 2010 ROBOTS must have their undepreciated cost included in the 2010 ROBOT cost accounting, and applied to the overall cost limits.

8.3.3.1 Cost Determination of Additional Parts

The "cost" of each non-KOP item is calculated based on the following criteria, as applicable:

A. The purchase price of a COTS item offered for sale by a VENDOR to any customer.

B. The total cost (materials + labor) of an item you pay someone else to make.

- Example: A team orders a custom bracket fabricated by a VENDOR to the team's specification. The VENDOR'S material cost and normally charged labor rate apply.

C. The fair market value of an item obtained at a discount or as a donation. Fair market value is that price at which the supplier would normally offer the item to other customers. Also considered to be "fair market value" are the discounted prices offered to all teams by suppliers with established relations with *FIRST*.

- Example: Special price discounts from National Instruments and Luminary Micro are being offered to all *FIRST* teams. The discounted purchase price of items from these sources would be used in the additional parts accounting calculations.

D. The cost of raw material obtained by a team + the cost of non-team labor expended to have the material processed further. Labor provided by team members and/or by a recognized team sponsor whose employees are members of the team does not have to be included.

- Example: A team purchases steel bar stock for $10.00 and has it machined by a local machine shop. The machine shop is not considered a team sponsor, but donates two hours of expended labor anyway. The team must include the estimated normal cost of the labor as if it were paid to the machine shop, and add it to the $10.00.
- Example: A team purchases steel bar stock for $10.00 and has it machined by a local machine shop that is a recognized sponsor of the team. The machinists are considered members of the team, so their labor costs do not apply. The total applicable cost for the part would be $10.00.

Note: it is in the best interests of the teams and *FIRST* to form relationships with as many organizations as possible. Teams are encouraged to be expansive in recruiting and including organizations in their team, as that exposes more people and organizations to *FIRST*. Recognizing supporting companies as sponsors of, and members in, the team is encouraged - even if the involvement of the sponsor is solely through the donation of fabrication labor.

E. The cost of items purchased in bulk or large quantities may be prorated on the basis of the smallest commonly available unit that satisfies the need for the item.

Example: A team purchases a 4' x 4' sheet of aluminum, but only uses a piece 10" x 10" on their ROBOT. The team identifies a source that sells aluminum sheet in 1' x1' pieces. The team may cost their part on the basis of a 1' x 1' piece, even though they cut the piece from a larger bulk purchase. They do not have to account for the entire 4' x 4' bulk purchase item.

F. Shipping costs of Non-Kit items are not counted.

G. If the item is part of a modular system that can be assembled in several possible configurations or applications, then each individual module must fit within the price constraints defined in Rule <R22>. If the modules are designed to assemble into a single configuration, and the assembly is functional in only that configuration, then the total cost of the complete assembly including all modules must fit within the price constraints defined in Rule <R22>.

8.3.4 Fabrication Schedule

FIRST recognizes that it is the responsibility of each team to design and construct their ROBOT within the schedule constraints defined below. As compliance with these rules takes place outside of the competition venues, *FIRST* is not able to directly monitor compliance. One of the fundamental values of *FIRST* is the concept of "gracious professionalism." We are relying upon the honor, integrity, and professional behavior of each team to recognize and abide by the fabrication schedule rules.

Note that schedule rules apply to both hardware and software development. Hardware and software design processes are thought-intensive activities, and team members are likely to continue to consider and analyze their designs long after the ROBOT is "completed." Teams cannot be prevented from thinking about their hardware and software designs, and it is not our intention to do so. However, the timeline permitted for the development of the actual competition version of the ROBOT is intentionally restricted. Pondering software issues to be resolved, researching general case solutions, discussing solutions with teammates, collecting raw materials, sketching mechanisms, preparing tools, and outlining high-level descriptions of software algorithms are all reasonable activities before the scheduled build period. However, completing detailed dimensioned drawings of specific parts, and any actual fabrication of any hardware items intended to go on the actual competition ROBOT is prohibited outside of the approved fabrication periods. On the software side, writing actual lines of code, verification of syntax, final debugging, etc would all be considered development of the final software implementation, and must be completed during the approved fabrication periods.

<R25> Prior to the Kick-off: Before the formal start of the Robot Build Season, teams are encouraged to think as much as they please about their ROBOTS. They may develop prototypes, create proof-of-concept models, and conduct design exercises. Teams may gather all the raw stock materials and COTS COMPONENTS they want. But absolutely no final design, fabrication, or assembly of any elements intended for the final ROBOT is permitted prior to the Kick-off presentation.

- Example: A TEAM designs and builds a two-speed shifting transmission during the fall as a training exercise. When designing their competition ROBOT, they utilize all the design principles they learned. To optimize the transmission design for their ROBOT, they improve the transmission gear ratios and reduce the size, and build two new transmissions, and place them on the ROBOT. All parts of this process are permitted activities.
- Example: The same TEAM realizes that the transmission designed and built in the fall perfectly fits their need for a transmission to drive the ROBOT arm. They build an exact copy of the transmission from the original design plans, and bolt it to the ROBOT. This would be prohibited, as the transmission – although fabricated during the competition season – was built from detailed designs developed prior to kick-off.
- Example: A TEAM developed an omni-directional drive system for the 2008 competition. Over the summer of 2009 they refined and improved the control software (written in C) to add more precision and capabilities. They decided to use a similar system for the 2010 competition. They copied large sections of unmodified code over into the control software of the new ROBOT (also written in C). This would be a violation of the schedule constraint, and would not be allowed.

- Example: The same TEAM decides to use the LabView as their software environment for 2010. Following kickoff, they use the previously-developed C code as a reference for the algorithms and calculations required to implement their omni-directional control solution. Because they developed new LabView code as they ported over their algorithms, this would be permitted.
- Example: A different team develops a similar solution during the fall, and plans to use the developed software on their competition ROBOT. After completing the software, they post it in a generally accessible public forum and make the code available to all teams. Because they have made their software generally available, under the terms of Rule <R67> it is considered COTS software and they can use it on their ROBOT.

<R26> During the Build Season: During the period between the Kick-off and the ROBOT shipment deadline, teams are to design and fabricate all the COMPONENTS and MECHANISMS required to complete their ROBOT. They are encouraged to use all the materials, sources and resources available to them that are in compliance with the rules of the 2010 FRC. There is no limit to the amount of time that may be put into this effort, other than via the realities of the calendar. When the ROBOT shipment deadline arrives, all work on the ROBOT must cease and the ROBOT must be placed in a "hands-off" condition. The entire ROBOT (including all FABRICATED ITEMS intended for use during the competition in alternative configurations of the ROBOT) must be crated or bagged (as appropriate for your event), and out of team hands by the shipment deadline specified in ***Section 4*** (with the exception of the items covered by the WITHHOLDING ALLOWANCE).

<R27> During the period between ship date and the competitions: During this period, <u>all teams</u> may manufacture SPARE, REPLACEMENT, and UPGRADE PARTS, and develop software for their ROBOT at their home facility.

A. Teams may manufacture all the SPARE, REPLACEMENT and UPGRADE PARTS they want.
B. There is no limit to the amount of time that may be put into this effort, other than via the realities of the calendar.
C. Teams may continue development of any items retained under the WITHHOLDING ALLOWANCE, continue to work on them during this period, and then bring them to the competition events.
D. The total weight of the FABRICATED ITEMS (SPARE, REPLACEMENT, and UPGRADE PARTS, plus all WITHHOLDING ALLOWANCE items) worked upon during this period and brought to the competition event(s) must not exceed the limits specified in Rule <R38>.
E. Teams attending 2-day events have unique rules governing ROBOT access. Please refer to ***Section 4.8*** for details.

The primary intent of this rule is to allow teams to withhold the ROBOT control system, the OPERATOR CONSOLE, and selected relevant subsystems, and access them after the shipping deadline. This will allow teams to have the maximum time possible prior to each competition event to develop and complete the software for their ROBOT while maximizing the potential capabilities provided by the control system.

<R28> At the competitions: Teams are allowed to repair, modify or upgrade their competition ROBOT while participating in a competition event. To support this, teams may bring SPARE, REPLACEMENT and UPGRADE PARTS and COTS items to the competitions (within the limits specified in Rule <R38>). Work can only be done on-site in the pits or at any facility made available to all teams at the event (e.g., in a team's repair trailer or a local team's shop offered to all teams to use). Fabrication may be done when the pit area is open for normal operations during the period starting with the opening of the pit area on the first day of the competition event and ending at 4:00PM on last day of the event. All work must be completed when the pit area closes each evening. Parts shall not be removed from the competition site and retained overnight after the pit area closes. At the conclusion of a regional competition event, the entire ROBOT (including all FABRICATED ITEMS intended for use during the competition in alternative configurations of the ROBOT) must be bagged or crated and out of team hands for shipping to the next event or back to the team.

A. Exception: A limited amount of FABRICATED ITEMS (not to exceed the limits specified in Rule <R38>) may be retained as part of the WITHHOLDING ALLOWANCE and brought back to the team's home facility for continued development.

<R29> During the period between Regional Competition weekends, and between the Regional Competitions and the Championship: During these periods, all teams (not just those teams attending a Regional Competition) may utilize the same opportunities, and must operate under the same restrictions as specified in Rule <R27>.

8.3.5 Material Utilization

<R30> Robots entered into the 2010 FRC shall be fabricated and/or assembled from COMPONENTS, MECHANISMS and COTS items that are constructed from:

A. Items provided in the KOP (or their exact REPLACEMENT PART)

B. Additional parts and materials as permitted in these Rules, in quantities consistent with the Budget Constraint rules (found in ***Section 8.3.3***). The use of non-KOP items or materials shall not violate any other robot design or fabrication rule.

<R31> Teams may replace lost or damaged KOP COMPONENTS only with identical COMPONENTS of the same material, dimensions, treatment, and/or part number.

<R32> COTS items that are generally available may be used on the ROBOT. The parts shall be generally available from suppliers such that any other *FIRST* team, if it so desires, may also obtain them at the same price. A specific device fabricated by a team from non-KOP materials for use by that team does not have to be available to others; however, the materials from which it is made must be available to other teams.

<R33> COTS items from ROBOTS entered in previous *FIRST* competitions or COTS items that are no longer commercially available may be used under the following conditions:

A. The item must be functionally equivalent to the original condition as delivered from the VENDOR (e.g. a part that has non-functional label markings added would be permitted, but a part that has device-specific mounting holes added would be prohibited), and

B. The item must satisfy ALL applicable 2010 FRC materials/parts use rules.

<R34> Parts custom-made for *FIRST* and provided to FRC teams in the Kit Of Parts for previous FRC competitions (e.g. 2006 FRC transmissions, custom-made motor couplers, custom sensor strips, FRC CMUcam II modules, etc.) may be used if the part is still functionally equivalent to the original condition and:

A. The part is now generally available as a COTS item from an accessible source, or

B. All information required to fabricate the part (e.g. complete drawings, materials list, Gerber Files where appropriate, etc.) is openly available, such that any team could fabricate the part (or have it fabricated for them).

Otherwise, such parts are prohibited from use in the 2010 competition.

<R35> FABRICATED ITEMS from ROBOTS entered in previous *FIRST* competitions shall not be used on ROBOTS in the 2010 competition.

<R36> Lubricants may be used only to reduce friction within the ROBOT. Lubricants shall not be allowed to contaminate the FIELD or other ROBOTS.

<R37> Teams may acquire and bring an unlimited amount of COTS items to the competitions to be used to repair and/or upgrade their ROBOT at the competition site.

<R38> Teams may bring a maximum of 40 pounds of custom FABRICATED ITEMS (SPARE PARTS, REPLACEMENT PARTS, and UPGRADE PARTS, plus all WITHHOLDING ALLOWANCE items) to each competition event to be used to repair and/or upgrade their ROBOT at the competition site. All other FABRICATED ITEMS to be used on the ROBOT during the competition shall arrive at the competition venue packed in the shipping crate or lockout bag with the ROBOT.

A. Exception: the OPERATOR CONSOLE is not included in the incoming parts weight restriction.

<R39> Teams participating in the 2010 FRC that are located outside North America may not be able to acquire the exact part (as identified by specific part numbers) or materials of the specified dimensions as defined in these rules. In such situations, international teams must submit a request for approval of nearest-equivalent parts (e.g. nearest metric equivalent, etc.) to *FIRST* Headquarters (via e-mail request to frcparts@usfirst.org). *FIRST* will determine suitability of the part. If approved, a confirming e-mail will be sent to the team. The team must bring a copy of the e-mail to any competition event to verify that the use of an alternate part has been approved.

8.3.6 Power Distribution

<R40> The only legal primary source of electrical energy on the ROBOT during the competition is one MK ES17-12 12VDC non-spillable lead acid battery, OR one EnerSys NP 18-12 battery, as provided in the 2010 KOP. Teams may use other equivalent 12V batteries during development, testing and practice MATCHES. However, during competition MATCHES only one MK ES17-12 battery OR one EnerSys NP 18-12 battery can be used on the ROBOT**.**

<R41> An automatic battery charger rated for a maximum of 6 amperes must be used to charge the supplied batteries. When recharging the KOP batteries, either the charger provided by *FIRST* or an automatic charger with an equivalent charging current rating may be used.

<R42> Items specifically PROHIBITED from use on the ROBOT include:

A. Any battery other than, or in addition to, the one primary battery permitted by Rule <R40>.
B. Circuit breakers used on the Power Distribution Board that are different from the Snap Action breakers provided in the KOP,
C. Power distribution panels and/or fuse panels different other than the single Power Distribution Board provided in the 2010 KOP,
D. Motor speed controllers other than Innovation First, Inc. "Victor 884" speed controllers or Luminary Micro/Texas Instruments "Jaguar" (MDL-BDC or MDL-BDC24) speed controllers,
E. Relay modules other than Innovation First, Inc. Spike relays,
F. Aluminum or other non-copper wiring.

<R43> All wiring and electrical devices, including all control system components, shall be electrically isolated from the ROBOT frame. The ROBOT frame must not be used to carry electrical current (e.g. this is necessary due to polarity reversals that occur under certain operating conditions such as during motor direction reversals).

> The chassis for the cRIO-FRC and the supplied KOP camera have grounded enclosures. Under this rule (and for their protection), it is REQUIRED that they be electrically isolated from the ROBOT frame when installed on the ROBOT.

<R44> The 12V battery, the main 120-amp circuit breaker, and the Power Distribution Board shall be connected as shown in Figure 8-6. In particular:

A. The battery must be connected to the ROBOT power system through the use of the Anderson Power Products (APP) connector.
B. The APP connector must be attached to the battery with either the copper lugs provided in the BURNDY Bag or appropriately-rated and -sized lug connectors.
C. The battery terminals and the connecting lugs must be insulated with shrink tubing and/or electrical tape.
D. The main 120-amp circuit breaker must be directly connected to the hot (+) leg of the ROBOT-side APP connector. Only one 120 amp main circuit breaker is allowed. This breaker must not be bypassed.
E. The Power Distribution Board must be directly connected to the APP connector and main 120-amp circuit breaker. No other loads may be connected to the main 120-amp circuit breaker.
F. Each primary power connection between the battery and Power Distribution Board must be made with 6 AWG red and black wire or larger
G. The 120-amp circuit breaker must be quickly accessible from the exterior of the ROBOT. It is recommended that the 120-amp circuit breaker location be clearly and obviously labeled to permit it to be easily found by field personnel during a MATCH.
H. The Power Distribution Board and all circuit breakers must be easily visible for inspection at each FRC event.

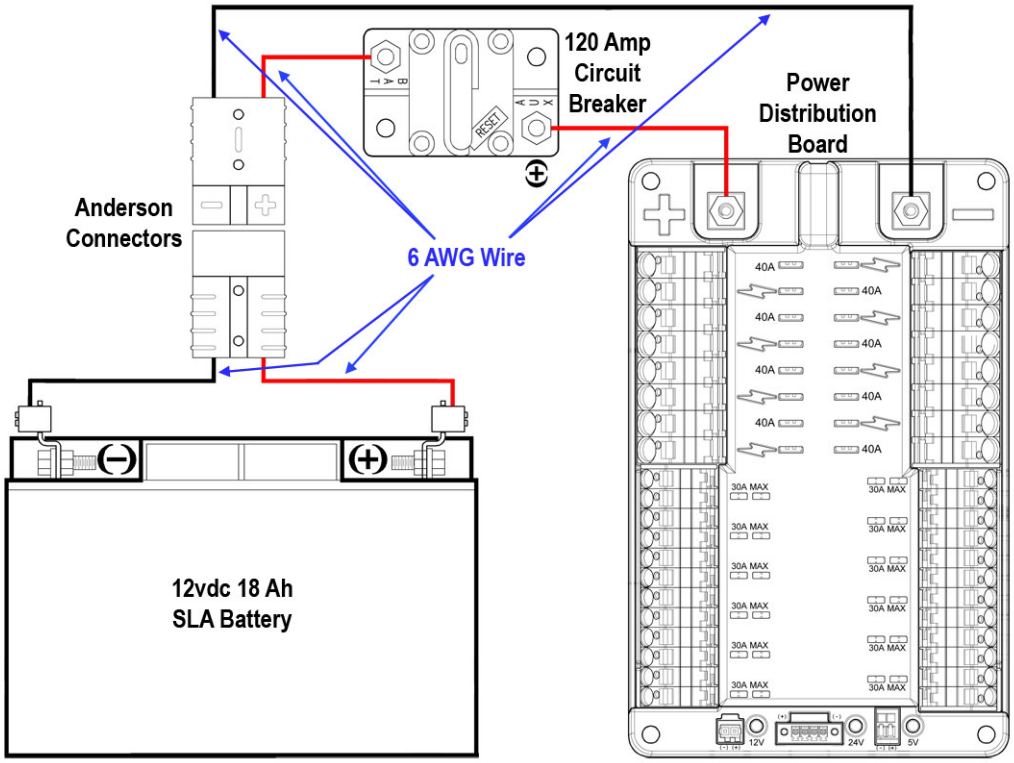

Figure 8 - 6

<R45> All electric power utilized by the ROBOT shall be distributed from the load terminals of the Power Distribution Board. Circuits may not bypass the Power Distribution Board to connect directly to the 120-amp loop.

A. The cRIO-FRC power input must be connected to the 24 Vdc supply terminals on the Power Distribution Board. No other electrical load can be connected to these terminals.

B. The Linksys Wireless Bridge power feed must be connected to the marked 12 Vdc supply terminals located at the end of the Power Distribution Board (i.e. the terminals located between the indicator LEDs, and not the main WAGO connectors along the sides of the Power Distribution Board). No other electrical load can be connected to these terminals.

C. If a 5V camera is used (such as the KOP camera), the camera power feed must be connected to the 5 Vdc supply terminals on the Power Distribution Board.

D. All other branch circuits must connect to, and have power sourced solely by, a protected 12 Vdc WAGO connector pair on the Power Distribution Board.

E. Only one wire shall be connected to each WAGO connector on the Power Distribution Board. If multi-point distribution of circuit power is required (e.g. to provide power to the three KOP breakout boards via one 20-amp circuit), then all incoming wires must be appropriately spliced into the main lead, and only one lead inserted into the WAGO connector to connect the circuit.

F. Sensors and custom circuits may be connected to the 5 Vdc sources on the Analog Breakout boards or the Digital Sidecars. By being logically downstream from the Power Distribution Board, they are protected by the 20-amp breaker at the circuit root.

G. Servos may be connected to the 6 Vdc sources on the Digital Sidecars (via the designated PWM connections, and with a “6Vdc enable” jumper in place for the corresponding port). By being logically downstream from the Power Distribution Board, they are protected by the 20-amp breaker at the circuit root. No other electrical load can be connected to these sources.

<R46> All active Power Distribution Board branch circuits shall be protected from overload with an appropriate value auto resetting Snap Action circuit breaker (from the KOP or identical equivalent).

A. Each speed controller branch circuit must be protected by one and only one 20-amp, 30-amp, or 40-amp circuit breaker on the Power Distribution Board. No other electrical load can be connected to the breaker supplying this circuit.

B. Each Spike relay module branch circuit must be protected with one and only one 20-amp circuit breaker on the Power Distribution Board. No other electrical load can be connected to the breaker supplying this circuit.

C. Each Digital Sidecar branch circuit must be protected with one and only one 20-amp circuit breaker on the Power Distribution Board. No other electrical load can be connected to the breaker supplying this circuit.

D. If the compressor is used, the Spike relay module branch circuit supplying the compressor must be protected with a 20-amp circuit breaker. No other electrical load can be connected to the breaker supplying this circuit.

E. A single branch supply circuit may be spliced to supply power to one, two or three of the Analog/Solenoid Breakout Boards. This circuit must be protected with one and only one 20-amp circuit breaker on the Power Distribution Board. No other electrical load can be connected to the breaker supplying this circuit.

F. Custom circuits and sensors powered via the cRIO-FRC or the Digital Sidecar are protected by the breaker on the circuit(s) supplying those devices. Power feeds to all other custom circuits must be protected with a dedicated 20-amp circuit breaker on the Power Distribution Board.

G. In addition to the required branch power circuit breakers, smaller value fuses or breakers may be incorporated into custom circuits for additional protection.

<R47> All active Power Distribution Board branch circuits shall be wired with appropriately sized wire:

A. ***12 AWG (2.052mm) or larger*** diameter wire must be used for all circuits protected by a 40A circuit breaker.

B. ***14 AWG (1.628mm) or larger*** diameter wire must be used for all circuits protected by a 30A circuit breaker.

C. ***18 AWG (1.024mm) or larger*** diameter wire must be used for all circuits protected by a 20A circuit breaker.

D. ***20 AWG (0.8128mm) or larger*** diameter wire must be used for the power connection between the Power Distribution Board and the cRIO-FRC .

E. ***20 AWG (0.8128mm) or larger*** diameter wire must be used for the power connection between the Power Distribution Board and the Linksys Wireless Bridge

F. ***20 AWG (0.8128mm) or larger*** diameter wire must be used for the power connections between the Power Distribution Board and the Analog Breakouts and/or Solenoid Breakout if individual power feeds are used. ***18 AWG or larger*** diameter wire must be used if a common power feed is used for multiple breakouts.

G. ***24 AWG (0.5106mm) or larger*** diameter wire must be used for providing power to pneumatic valves.

<R48> All active Power Distribution Board branch circuit wiring with a constant polarity (i.e., except for relay module, speed controller, or sensor outputs) shall be color-coded as follows:

A. Use red, white, brown, or black with stripe wire for +24 Vdc, +12 Vdc and +5 Vdc connections.

B. Use black or blue wire for common (-) connections.

<R49> Each power-regulating device (speed controller or relay module) shall control one and only one electrical load (motor, actuator or compressor).

A. Exception: Multiple low-load, pneumatic solenoid valves may be connected to a single relay module. This would allow one relay module to drive multiple pneumatic actions. No other electrical load can be connected to a relay module used in this manner.

<R50> Custom circuits shall NOT directly alter the power pathways between the battery, Power Distribution Board, speed controllers, relays, motors, or other elements of the robot control system (including the power pathways to other sensors or circuits). Custom high impedance voltage monitoring or low impedance current monitoring circuitry connected to the ROBOT'S electrical system is acceptable, because the effect on the ROBOT outputs should be inconsequential.

<R51> Decorations may draw power from the 12 Vdc electrical system as long as they are powered via a dedicated 20 amp circuit breaker on the Power Distribution Board, and do not affect the operation of other control system components.

8.3.7 Motors & Actuators

<R52> Motors specifically permitted on 2010 FRC ROBOTS include:

A. All motors, actuators, and servos listed in the 2010 KOP,

B. An unlimited number of COTS servos with a maximum output torque of 55 oz-in and maximum rotational speed of 100 rpm at 6 Vdc (e.g. HITEC model HS-322HD or HS-325HB servos, as provided in the KOP),

C. An unlimited number of *FIRST* Tech Challenge (FTC) servos (HITEC HS-475HB servos),

D. One, two, or three additional 2½" CIM motors (part #FR801-001 and/or M4-R0062-12) in addition to those provided in the KOP. This means that up to five, and no more, 2½" CIM motors can be used on the ROBOT.

E. Identical one-to-one SPARE PARTS for motors, actuators, and servos provided in the 2010 KOP that may have failed or become damaged.

<R53> Items specifically PROHIBITED from use on the ROBOT include:

A. Electric motors and/or servos different from, or in addition to, those in the KOP, with the exception of those specifically permitted by Rule <R52>.

B. Electric solenoid actuators (note: electric solenoid actuators are NOT the same as pneumatic solenoid valves – the latter are permitted, the former are not).

<R54> So that the maximum power level of every ROBOT is the same, motors and servos used on the ROBOT **shall not be modified in any way**, except as follows:

A. The mounting brackets and/or output shaft/interface of the motors may be modified to facilitate the physical connection of the motor to the ROBOT and actuated part.

B. The gearboxes for the Fisher-Price motors are not considered “integral” and may be separated from the motors.

C. The electrical input leads on the motors may be trimmed to length as necessary.

The intent is to allow teams to modify mounting tabs and the like, not to gain a weight reduction by potentially compromising the structural integrity of any motor. The integral mechanical and electrical system of the motor is not to be modified. Note that *FIRST* will not provide replacements for modified parts.

<R55> All electrical loads (motors, actuators, compressors) must be supplied by an approved power regulating device (speed controller, relay module, or Digital Sidecar PWM port) that is controlled by the cRIO-FRC on the ROBOT.

A. Each CIM motor and Fisher-Price motor must be connected to one and only one approved speed controller. These motors must not be connected to relay modules.

B. Servos must be directly connected to the PWM ports on the Digital Sidecar. They must not be connected to speed controllers or relay modules.

C. If used, the compressor must be connected to one and only one Spike relay module.

D. Each other electrical load (motor or actuator) must be supplied by one and only one approved speed controller, or one and only one relay module.

8.3.8 Control, Command & Signals System

The FRC robot control system has been designed to provide advanced capabilities for the ROBOTS. The system has been designed around an open architecture that will allow teams to easily develop custom software to control the ROBOT and add electronics and custom circuits to expand the functionality of the ROBOT. Custom circuits may be used to indirectly affect the robot outputs by providing enhanced sensor feedback to the cRIO-FRC to allow it to more effectively control the ROBOT.

Note that with increased capability comes increased responsibility. Teams are ultimately responsible for any software bugs introduced into the standard robot control software, or undesirable effects from added custom circuits. So, teams will have to exercise care to prevent these conditions. To assist with this, teams are encouraged to investigate, learn and practice industry-standard software Validation and Verification (V&V) techniques and develop thorough hardware testing plans.

The control system hardware is provided to rookie teams in the 2010 KOP. Veteran teams are required to reuse their 2009 FRC robots to recover the control system hardware provided in the 2009 KOP, or purchase exact SPARE PART equivalents for use on their 2010 FRC ROBOTS.

<R56> ROBOTS must be controlled via the programmable National Instruments cRIO-FRC (National Instruments part number 780406-01). Other controllers shall not be used.

<R57> The cRIO-FRC , Classmate PC, wireless bridge, and wireless router must be configured to correspond to the correct team number (assigned to the team by *FIRST*). The procedures for configuring these devices are contained in the FRC control system documentation.

<R58> One KOP wireless bridge (either model WGA600N or WET610N) is the only permitted mechanism for communicating to and from the ROBOT during the MATCH. The signal output from the wireless bridge must be directly connected to Port 1 of the cRIO-FRC with an Ethernet cable. All signals must originate from the OPERATOR CONSOLE and/or the Field Management System, and be transmitted to the ROBOT via the official ARENA hardware. No other form of wireless communications shall be used to communicate to, from or within the ROBOT (e.g. radio modems from previous *FIRST* competitions and Bluetooth devices are not permitted on the ROBOT during competition).

<R59> ROBOTS shall use the diagnostic Robot Signal Light provided in the KOP. It must be mounted on the ROBOT such that it is easily visible while standing three feet in front of the ROBOT in the NORMAL CONFIGURATION. The team has no direct control over the light and no programming is required.

A. The Robot Signal Light must be connected to the "RSL" supply terminals on a Digital Sidecar (see the ***FRC Control System Manual, Section 3.5*** and the item bulletin online at http://literature.rockwellautomation.com/idc/groups/literature/documents/in/41063-177-01.pdf for connection details). These terminals provide power and control for the light.

B. The Digitial Sidecar must be connected to a NI 9403 module in Slot 4 of the cRIO-FRC. If it is connected through any other slot, the light will not function properly.

C. The light must be wired for "solid light" operation, by placing a jumper between the La and Lb terminals on the light.

<R60> The control system is designed to allow wireless control of the ROBOTS. The Classmate PC, FirstTouch I/O module, cRIO-FRC, speed controllers, relay modules, wireless bridge, batteries, and battery charger shall not be tampered with, modified, or adjusted in any way (tampering includes drilling, cutting, machining, gluing, rewiring, disassembling, etc.), with the following exceptions:

A. User programmable "dashboard" code in the Classmate PC may be customized.

B. User programmable code in the cRIO-FRC may be customized.

C. Dip switches on the cRIO-FRC may be set.

D. Speed controllers may be calibrated as described in owner's manuals.

E. The supplied fans attached to the Victor speed controllers may be powered from the Victor power input terminals.

F. The fuse on the Spike relays may be replaced with a 20 Amp Snap-Action circuit breaker.

G. The alligator clips on the battery charger leads may be replaced with Anderson Power Pole connectors (note: this is a recommended modification).

H. Wires, cables, and signal lines may be connected via the standard connection points provided on the devices.

I. Fasteners may be used to attach the device to the OPERATOR CONSOLE or ROBOT.

J. Labeling may be applied to indicate device purpose, connectivity, functional performance, etc.

K. Brake/Coast jumpers on speed controllers may be changed from their default location.

L. If CAN-bus functionality is used, limit switch jumpers may be removed from a Jaguar speed controller and a custom limit switch circuit may be substituted (so that the cRIO-FRC may read the status of the limit switches).

M. If CAN-bus functionality is used, the Jaguar firmware must be updated as required by *FIRST* (see Rule <R63-D>).

N. If the FirstTouch I/O module is not used as part of the OPERTOR CONSOLE, the embedded software may be modified. If the First Touch I/O module is used as part of the OPERATOR CONSOLE, the default software image must be used.

<R61> Relay module outputs, speed controller outputs, or PWM outputs must not be connected to the analog/solenoid breakout boards or the Digital Sidecar. 12Vdc power must not be connected to any terminal on the analog/solenoid breakout boards or the Digital Sidecar except the designated 12Vdc input terminals. Doing so may damage or destroy components of the control system.

<R62> Every relay module, servo, and Victor speed controller shall be connected via PWM cable to the Digital Sidecar and be controlled by signals provided from the cRIO-FRC via the Digital Sidecar. They shall not be controlled by signals from any other source.

<R63> Each Jaguar speed controller must be controlled with signal inputs sourced from the cRIO-FRC and passed via either a connected PWM cable or a CAN-bus connection.

A. The Jaguar must receive signals via either a PWM cable -OR- a CAN-bus connection. Both cannot be used simultaneously.
B. PWM configuration: If the Jaguar speed controller is controlled via PWM communications, the PWM port on the Jaguar speed controller must be connected directly to a PWM port on the Digital Sidecar with a PWM cable. No other devices may be connected to these PWM ports. No other devices may be connected to any other ports on the Jaguar speed controller.
C. CAN-bus configuration: If the Jaguar speed controller is controlled via CAN-bus communications, then each Jaguar speed controller must be connected to either the cRIO-FRC or another CAN-bus device with a CAN-bus cable.
D. If the CAN-bus configuration is used, the firmware on all Jaguar speed controllers must be updated to at least Version 86 of the official FIRST firmware.

<R64> If CAN-bus communications are used, the CAN-bus must be connected to the cRIO-FRC through either Ethernet Port 2 or the RS-232 DB-9 serial port connection. No other connections to the cRIO-FRC may be used by the CAN-bus.

A. Ethernet-to-CAN convertors, serial-to-CAN convertors, serial-to-CAN cables, “black” Jaguars, or other network bridging devices may be used to connect the CAN-bus to the selected cRIO-FRC port.
B. If a “black” Jaguar (TI Model MDL-BDC24) is used as the serial-to-CAN bridge, the first Jaguar on the CAN-bus must be a “black” Jaguar. Any “grey” Jaguars (TI Model MDL-BDC) on the bus must be located downstream from the first “black” Jaguar.
C. Additional switches, sensor modules, custom circuits, third-party modules, etc. may also be placed on the CAN-bus.
D. No device that interferes with, alters, or blocks communications between the cRIO-FRC and the Jaguars will be permitted (tunneling packets for the purposes of passing them through an Ethernet-to-CAN convertor is acceptable as the commands are not altered).

<R65> Solenoid Breakout outputs shall be connected to pneumatic valve solenoids only. No other devices shall be connected to these outputs.

<R66> A National Instruments 9201 module must be installed in slot 1 of the cRIO-FRC . An analog breakout must be connected to this module. A jumper must be installed in the “Power” position (two outer pins) on the analog breakout. The analog breakout must be powered from the Power Distribution Panel. Please refer to Section 3.4 of the “FRC Control System Component Data Sheets” for information on these connections.

These connections enable monitoring of the battery charge by the team and the Field Management System. This is a required element of the ROBOT configuration.

<R67> For the purposes of the FRC, generally available software modules obtained from open sources (e.g. professional publications, commonly used FRC community-accessible web resources, industry source code repositories, etc.) that are not specifically affiliated with individual FRC teams shall be considered COTS items, and may be used.

<R68> All outputs from sensors, custom circuits and additional electronics shall connect to only the following:

A. other custom circuits, or
B. additional COTS electronics, or
C. input ports on the Digital Sidecar, or
D. input ports on the Analog Breakout, or
E. the RS-232 DB-9 serial port on the cRIO-FRC, or
F. the Ethernet bus connected to Port 2 of the cRIO-FRC, or
G. the CAN-bus if and only if all Jaguar speed controllers on the CAN-bus are wired in full compliance with Rule <R63> and Rule <R64>.

Custom circuits and additional electronics are allowed to utilize the Port 2 Ethernet bus and/or the CAN-bus to communicate between devices. Note however, that the ROBOT must be controlled by the cRIO-FRC (see Rule <R56>). Thus, any additional devices on the Ethernet or CAN-bus must not provide command signals that do not originate from the cRIO-FRC It is our intent to incrementally open access to the full control system technologies in a controlled manner that reduces the risk of "unanticipated surprises" as we gain experience with the system.

<R69> A signal filter may be wired across motor leads or PWM leads. For the purposes of inspection and rules compliance, such filters will not be considered custom circuits, and will not be considered a violation of Rule <R54> or Rule <R68>. Acceptable signal filters are:

- A one microfarad (1 µF) or less non-polarized capacitor may be applied across the power leads of any motor on your ROBOT (as close to the actual motor leads as reasonably possible)
- A resistor may be used as a shunt resistor for the PWM control signal feeding a servo

<R70> Any decorations that involve broadcasting a signal to/from the ROBOT, such as remote cameras, must be cleared with *FIRST* Engineering (via e-mail to frcteams@usfirst.org) prior to the event and tested for communications interference at the venue. Such devices, if reviewed and approved, are excluded from Rule <R58>.

8.3.9 Pneumatic System

<R71> To satisfy multiple constraints associated with safety, consistency, robot inspection, and constructive innovation, no pneumatic parts other than those explicitly permitted by the Pneumatic System Rules may be used on the ROBOT.

<R72> In addition to the items included in the KOP, pneumatic system items specifically permitted on 2010 FRC ROBOTS include the following items. All included items must be "off the shelf" pneumatic devices rated by their manufacturers for pressure of at least 125psi, and used in their original, unaltered condition (except as required for assembly with other components).

A. One or two additional Clippard air storage tanks (Clippard Part Number AVT-32-16), equivalent to those provided in the kit. This means that up to four, and no more, Clippard air storage tanks can be used on the ROBOT.

B. Pneumatic pressure vent plug valves functionally equivalent to those provided in the KOP (Parker Part Number PV609-2).

C. Solenoid valves. All such valves must have a maximum ⅛" NPT port diameter, and a maximum Cv of 0.32 (if non-KOP valves are used, the team will be required to provide part documentation validating that the valves meet these constraints).

D. In addition to the pneumatic cylinders provided in the KOP and the "free" pneumatic cylinders available for order through the Free Pneumatic Components Order Form, additional air cylinders or rotary actuators may be used. Cylinders may be of any configuration, and may be of any size up to a maximum of 24-inch stroke and 2-inch diameter.

E. Additional 0.160" inch inside diameter pneumatic tubing functionally equivalent to that provided in the KOP, with the pressure rating clearly factory-printed on the exterior of the tubing (note: alternate tubing colors are acceptable).

F. Pressure transducers, pressure gauges, and connecting fittings.

G. Pressure regulators with a maximum bypass pressure of no more than 60psi.

H. For the purposes of the *FIRST* competition, a device that creates a vacuum is not considered to be a pneumatic device and are not subject to the pneumatic rules (although they must still satisfy all other appropriate rules). These include, but are not limited to, venturi-type vacuum generators and off-the-shelf vacuum devices (as long as they are powered by provided or permitted motors).

I. For the purposes of the *FIRST* competition, closed-loop pneumatic (gas) shocks are not considered pneumatic devices, and are not subject to the pneumatic rules (although they must still satisfy all other appropriate rules).

<R73> Items specifically PROHIBITED from use on the ROBOT include:

A. Any pneumatic part or component rated for less than 125psi.

B. Any pneumatic part or component that has been altered, modified, machined, coated, or changed from its original "out of the box" condition, except as required for normal assembly with other components. The only acceptable modifications are:

- Tubing may be cut.
- Wiring for pneumatic devices may be modified to interface with the control system.
- Assembling and connecting pneumatic components using the pre-existing threads, mounting brackets, quick-connect fittings, etc.
- Removing the mounting pin from a pneumatic cylinder, provided the cylinder itself is not modified.
- Labeling applied to indicate device purpose, connectivity, functional performance, etc.

> Do not, for example, file, machine, or abrasively remove any part of a pneumatic cylinder – this would cause the part to become a prohibited item. Consider pneumatic components sacred.

<R74> If pneumatic components are used on the ROBOT, the pneumatic system on the ROBOT must contain as a minimum the following components, connected in accordance with this section.

- Pressure gauges to display the "stored" and "working" air pressure (see Rule <R76>),
- A pressure relief valve, calibrated and set to release at 125psi (see Rule <R77>),
- A pressure switch, calibrated and connected to the ROBOT control system (see Rule <R78>),
- An easily visible and accessible pressure vent plug valve to manually relieve the stored pressure (see Rule <R79>).

<R75> Compressed air for the pneumatic system on the ROBOT must be provided by one and only one compressor. This compressor may be either the Thomas Industries compressor from the KOP, or an equivalent compressor that does not exceed any of the KOP compressor performance specifications (specifically: 12v, 0.8cfm flow rate, 120psi continuous pressure, 120psi maximum pressure compressor). Note: if an alternative compressor is used, during inspection the team may be required to provide documentation to show compliance with the performance specifications. Compressed air shall not come from any other source. The compressor may be mounted on the ROBOT, or it may be left off the ROBOT and used to pre-charge compressed air in the storage tanks prior to bringing the ROBOT onto the FIELD. Off-board compressors must be controlled and powered by the ROBOT.

> The only difference between an on- and off-board compressor is that the off-board compressor is physically removed from the ROBOT. The intent of this rule is to permit teams to take advantage of the weight savings associated with keeping the compressor off-board. However, using the compressor off-board of the ROBOT does NOT permit non-compliance with any other applicable rules.

<R76> "Working" air pressure on the ROBOT must be no greater than 60psi. All working air must be provided through one primary Norgen adjustable pressure regulator.

A. All "working" pneumatic components (e.g. valves, cylinders, rotary actuators, etc.) must be downstream from this regulator.

B. Only the compressor, relief valve, pressure switch, pressure vent plug valve, pressure gauge, storage tanks, tubing, and connecting fittings may be in the high-pressure pneumatic circuit upstream from the regulator.

C. Pressure gauges must be placed in easily visible locations upstream and downstream of the regulator to display the "stored" and "working" pressures.

D. If the compressor is not included on the ROBOT (under the provisions of Rule <R75>), the regulator may be located on-board or off-board, provided all other pneumatic rules are satisfied. Note that if the regulator is kept off-board the ROBOT with the compressor, then only low-pressure (60psi or less) "working" air can be stored on the ROBOT.

<R77> The relief valve must be attached directly to the compressor. **Teams are not allowed to adjust the 125-psi relief valve**. The valve has been calibrated prior to shipping.

<R78> The Nason pressure switch must be connected to the high-pressure side of the pneumatic circuit (i.e. prior to the pressure regulator) to sense the "stored" pressure of the circuit. The two wires from the pressure switch must be connected directly to a digital input and ground port on the Digital Sidecar, and the cRIO-FRC must be programmed to sense the state of the switch and operate the relay module that powers the compressor to prevent over-pressuring the system.

<R79> The Parker pressure vent plug valve must be connected to the pneumatic circuit such that, when manually operated, it will vent to the atmosphere to relieve all stored pressure. The valve must be placed on the ROBOT so that it is visible and easily accessible. If the compressor is not used on the ROBOT, then an additional vent valve must be obtained and connected to the high-pressure portion of the pneumatic circuit off board the ROBOT with the compressor (see Rule <R74>).

8.3.10 Operator Console

<R80> The DRIVER STATION provided in the KOP is the only system permitted to collate driver/operator inputs and communicate them to the ROBOT. Operator Interfaces and devices from previous *FIRST* competitions shall not be used.

<R81> The OPERATOR CONSOLE designed by the team must fit on the 60" wide by 12" deep shelf in the ALLIANCE STATION (excluding any items that are held or worn by the DRIVERS during the MATCH).

<R82> Teams are permitted to connect a portable computing device (Laptop computer, PDAs, etc.) to the DRIVER STATION for the purpose of displaying feedback from the ROBOT while participating in competition MATCHES. Portable computing devices *may only connect to the DRIVER STATION through one of the USB ports* or through the breadboard – they shall not connect to the DRIVER STATION through any other port. Portable computing devices may only connect to the DRIVER STATION – they must not directly connect to any ARENA ports or equipment. Please note that ***AC power will not be available at the PLAYERS STATIONS so these devices will have to run on internal batteries or be self-powered.***

<R83> The Classmate PC must be positioned within the OPERATOR CONSOLE so that the screen display can be clearly seen during inspection and during operation in a MATCH. The Ethernet port on the OPERATOR CONSOLE must be easily and quickly accessible. This will greatly facilitate installation and removal of the OPERATOR CONSOLE from the ARENA, and analysis by field personnel in case of problems during the competition.

<R84> During competition MATCHES, the ARENA Ethernet cable must connect directly to the Ethernet port on the Classmate PC (making a direct connection via a "pigtail" cable is permitted). Only the Classmate PC may connect to the competition cable – no direct connection of team-provided portable computers, PDAs, or alternate devices is permitted.

<R85> The Classmate PC must be configured with current software images prior to a team competing in a MATCH. The Field Management System will verify that the DRIVER STATION software is correct before it will permit a ROBOT to operate on the FIELD.

<R86> Other than the system provided by the ARENA, no other form of wireless communications shall be used to communicate to, from or within the OPERATOR CONSOLE (e.g. active wireless network cards and Bluetooth devices are not permitted in the OPERATOR CONSOLE).

<R87> The wireless router and the E-Stop button provided in the KOP shall not be included as part of the OPERATOR CONSOLE during competition MATCHES. Competition versions of these devices are included in the ARENA, and the KOP versions are duplicative.

8.3.11 Robot Inspection

<R88> At the time of inspection, the ROBOT must be presented with ***all*** MECHANISMS (including ***all*** COMPONENTS of each MECHANISM) ***and configurations*** that will be used on the ROBOT during the entire competition event. It is acceptable, however, for a ROBOT to play MATCHES with a **subset** of the MECHANISMS that were present during inspection. Only MECHANISMS that were present during the inspection may be added, removed or reconfigured between MATCHES. If subsets of MECHANISMS are changed between MATCHES, the reconfigured ROBOT must still meet all inspection criteria.

<R89> At the time of inspection, teams must submit an electronic copy of their Bill Of Materials (BOM) of all items used in the construction of their ROBOT, and their associated costs, to the inspector (see Rule <R21>). BOMs must be transferred to inspectors at the event via USB drive (inspector or team provided).

<R90> The ROBOT will be inspected for compliance with the dimension constraints specified in Rule <R10> while in its NORMAL CONFIGURATION, by being placed within a *FIRST* Sizing Device that has inside surface dimensions consistent with the rule. Other than resting on the floor of the Sizing Device, no part of the ROBOT can break the plane of the sides or top of the Sizing Device during size inspection. The ROBOT must be self-supporting while in the Sizing Device.

<R91> All decorations must be on the ROBOT at the time of final inspection.

<R92> Any ROBOT construction technique or element that is not in compliance with the Robot Rules (Rule <R01> through Rule <R96>) must be rectified before a ROBOT will be allowed to compete or continue competing.

<R93> ROBOTS will normally be allowed to participate in scheduled practice MATCHES prior to passing inspection. However, the lead inspector and/or head referee may determine at any time that the ROBOT is unsafe, and may prohibit further participation in practice MATCHES until the condition is corrected and the ROBOT passes inspection.

<R94> If a ROBOT is rejected by inspectors due to a safety issue or concern related to the team's method of storing energy (see Rule <R01>), the concerned items must be disabled or removed from the ROBOT before it can compete in a MATCH. The team bears the burden of proof that such a rejection is not valid. Teams should be prepared to provide justifiable test data or calculations during inspection to support their design.

<R95> If a ROBOT is modified after it has passed inspection, that ROBOT must be re-inspected.

If an observation is made that another team's ROBOT may be in violation of the robot rules, please approach *FIRST* officials to review the matter in question. This is an area where "Gracious Professionalism" is very important

<R96> *FIRST* Officials may randomly re-inspect ROBOTS participating in competition MATCHES to assure compliance with the rules.